MARINER OUTBOARDS

MERCURY OUTBOARDS

service bulletin

No. 92-14

Stronger Spark Advance Spring P/N 24-823235 - 135 thru 200

Mariner and Mercury

1992 and newer

135 thru 200

S/N 0D187699 and above

Starting with s/n 0D187699 a stronger spring p/n 24-823235 is installed in the throttle/spark arm assembly. The stronger spring will ensure proper spark advance during acceleration. With the previous weaker spring, the spark arm may not have enough force to move the trigger if it is binding or the trigger wires are not routed properly or are pulled too tight. A trigger that sticks or moves too slow may cause bogging during acceleration or general poor performance.

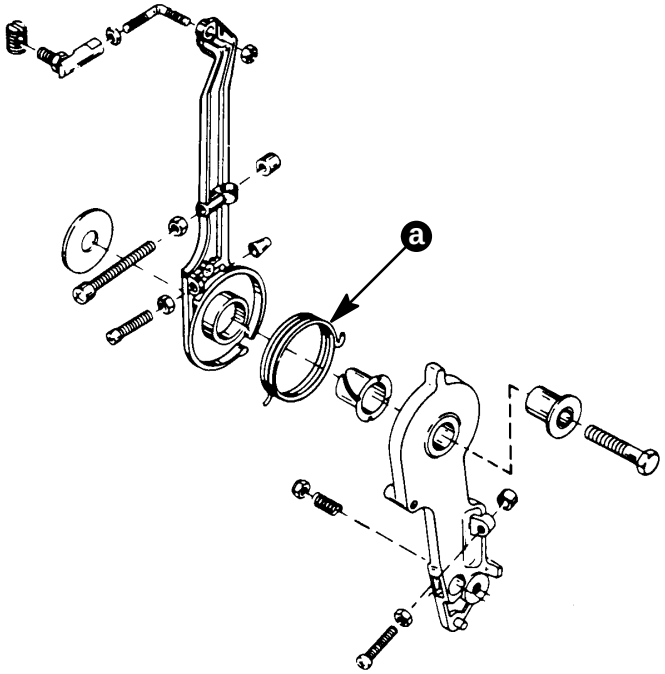

a - Spark Arm Spring

Figure 1. Throttle/Spark Arm Assembly

The slow moving trigger problem may go back to the models produced in 1990 when we removed the “U” shaped spring and changed the spark arm spring to reduce excessive throttle force. Refer to Service Bulletin 89-16A.

REPAIR:

Adjust the trigger wire slack by moving the wire in the “J” clip at the back of the block.

Replace existing spark arm spring with the stronger spring p/n 24-823235.

WARRANTY:

Complete warranty claim listing:

Qty. 1 p/n 24-823235 Spring

One half (0.5) hour labor

Warranty labor rate code NJC

Failure code 726 98

US and Canada - Return part with claim.

International - Hold parts for inspection/disposal by a Marine Power International technical representative.